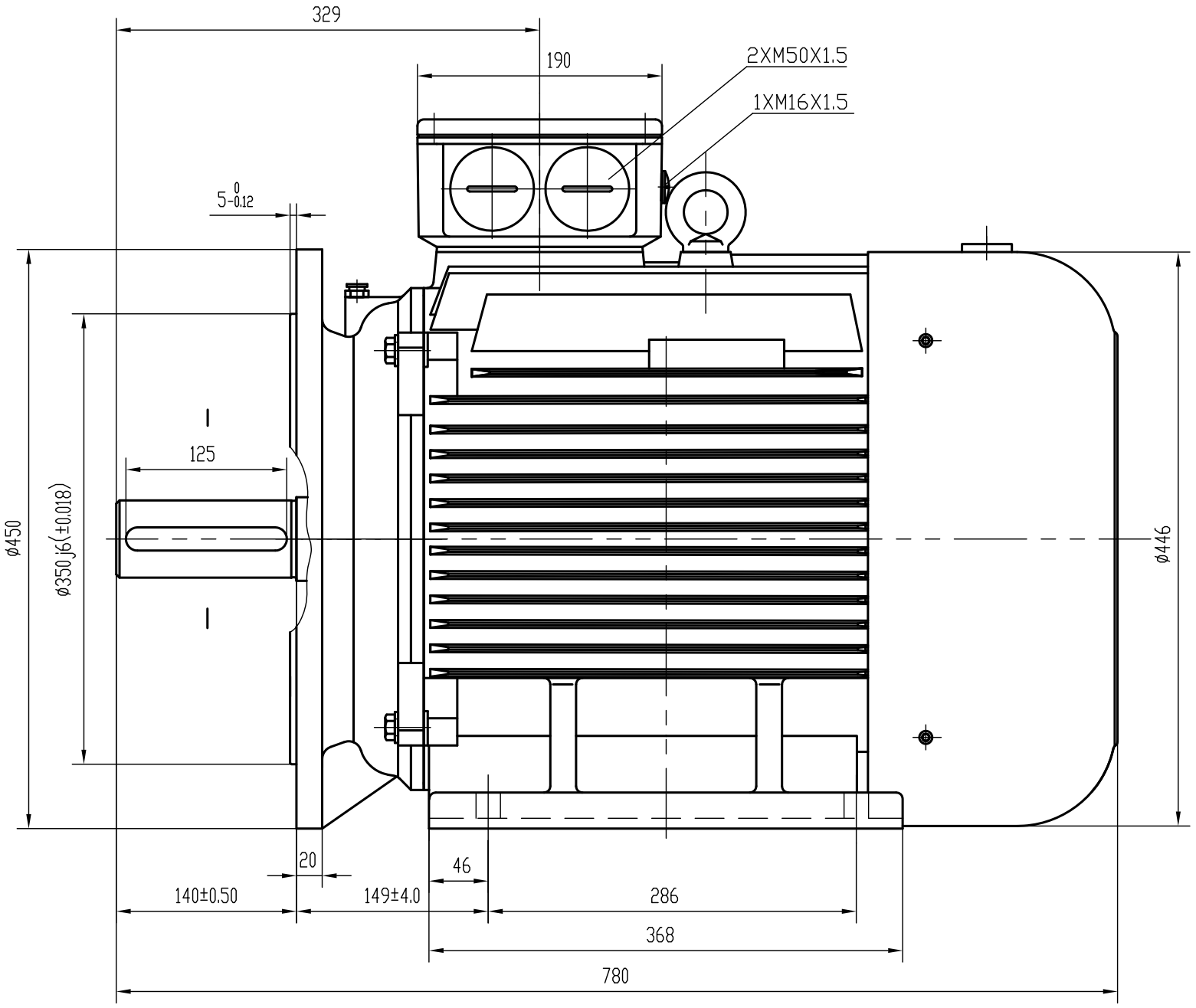

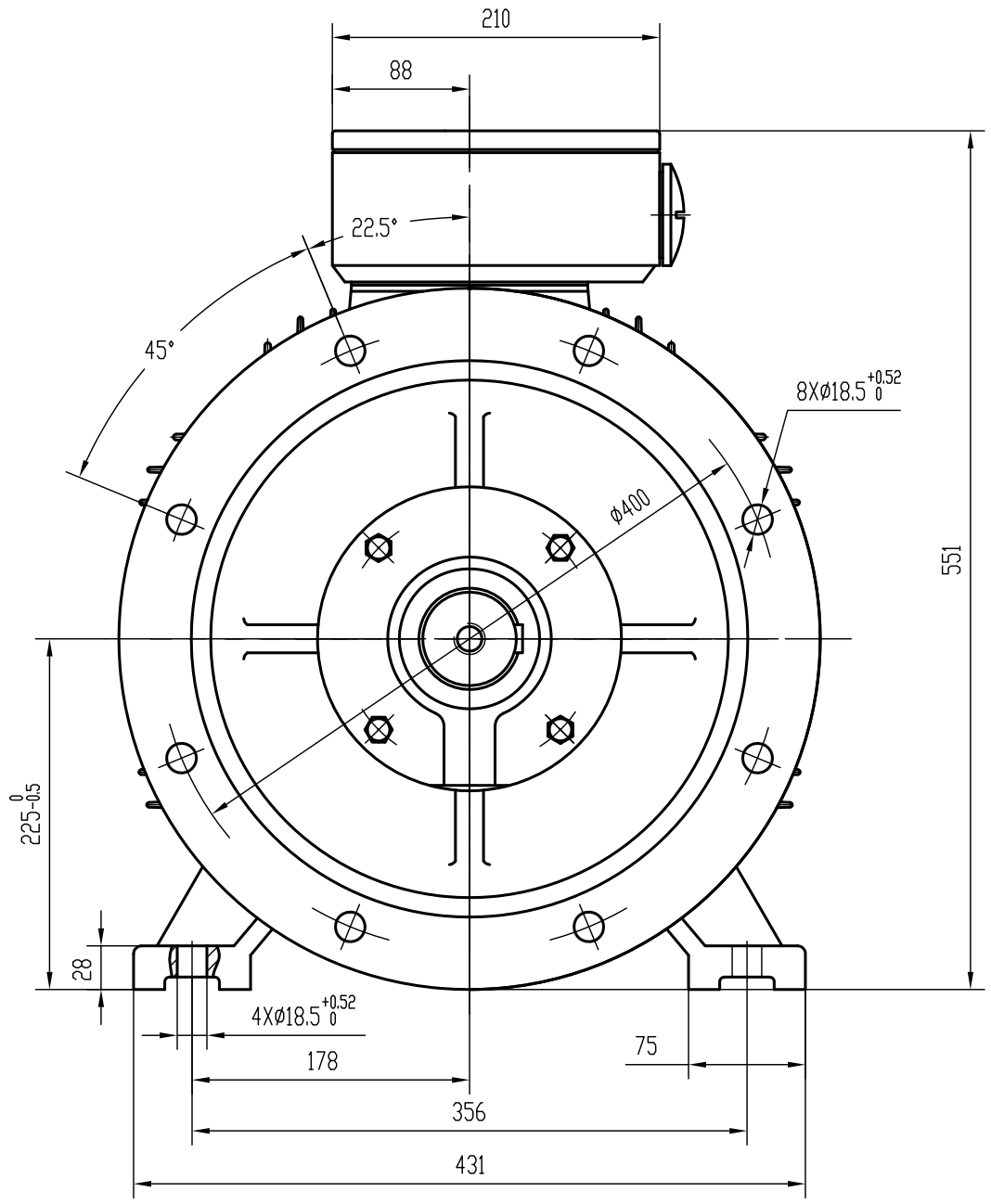

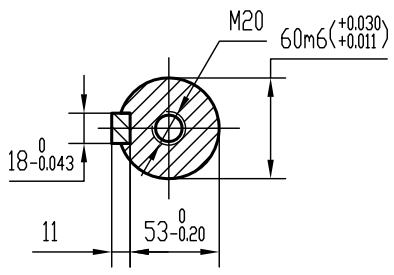

HANSLER

TITLE: IRON JM3-225S-4-B35	
DATE: 11/2018	DRAWN BY: PC
CLIENT: MOTOR DIMENSIONS AND SPECFICATION	SCALE: NOT TO SCALE / CHECKED BY: KL

FIGURED DIMENSIONS TO BE FOLLOWED IN PREFERENCE TO THE DIMENSIONS SCALED FROM THE DRAWING. ALL DIMENSIONS TO BE CHECKED ON SITE BY CONTRACTOR AND SUCH DIMENSIONS TO BE HIS RESPONSIBILITY. DRAWING ERRORS AND OMISSIONS TO BE REPORTED TO ARCHITECT. WORK SHOULD NOT COMMENCE ON SITE UNTIL ALL STATUTORY APPROVALS HAVE BEEN GRANTED AND THE CONTRACTOR HAS ISSUED THE ARCHITECT WITH ALL THE RELEVANT INSURANCES

CONTRACTOR FIRMS OR ANY PERSONS WORKING OFF THESE DRAWINGS SHOULD BE COMPETENT AND SHOULD ONLY BE EMPLOY STAFF TRAINED IN ALL ASPECTS OF HEALTH AND SAFETY & COMPLY FULLY WITH THEIR RESPONSIBILITIES UNDER THE CDM REGULATIONS. FURTHERMORE TRACING OF ELECTRICAL & OTHER STATUTORY SERVICES ON SITE IS TO BE CARRIED OUT BY COMPETENT TRAINED STAFF USING RECOMMENDED EQUIPMENT BY THE RELEVANT STATUTORY BODIES.